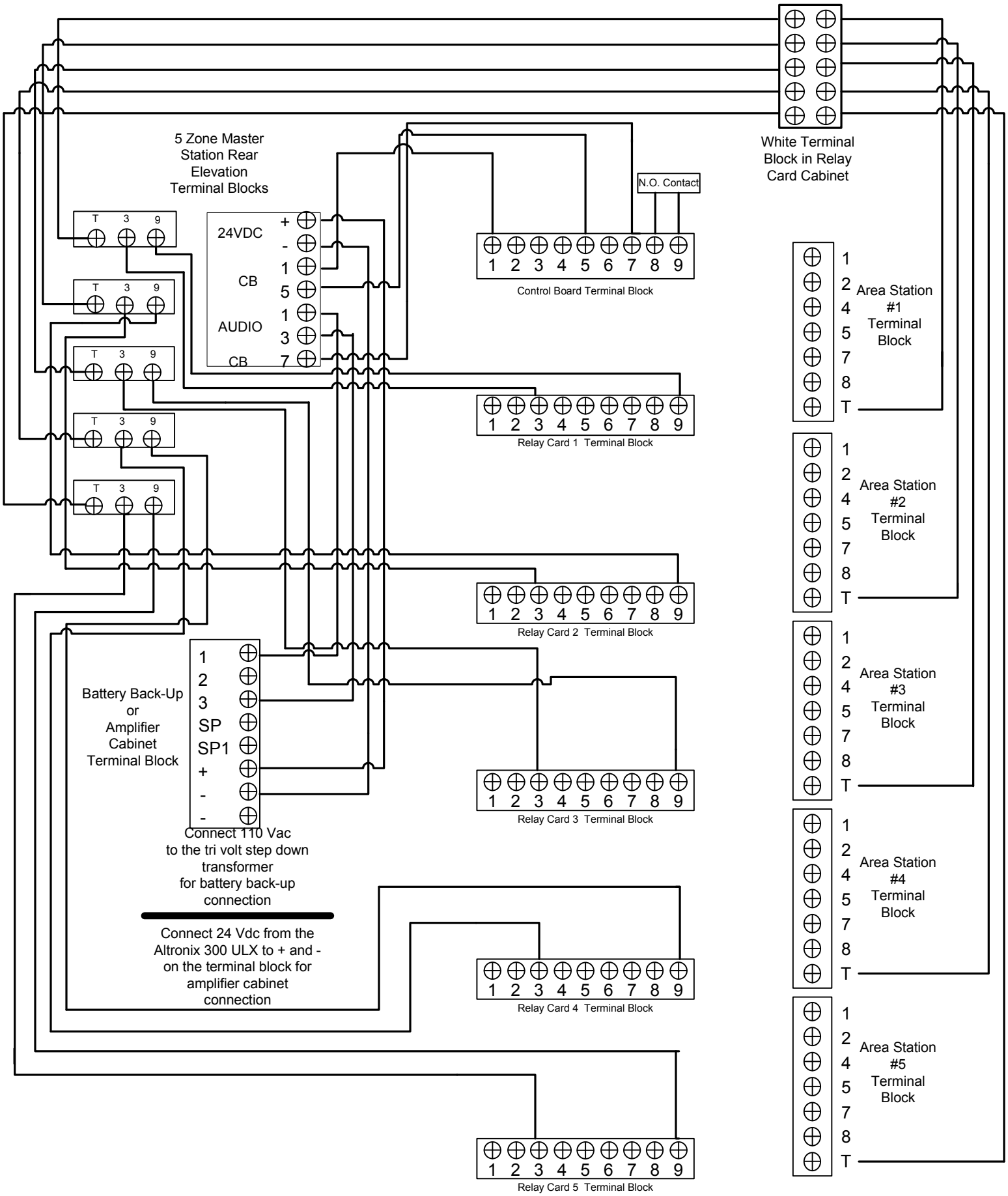ADA-100 Master Station Riser Diagram